TRANSFLUID®
industrial & marine

CERTIFIED ISO 9001

HYBRID & ELECTRIC TECHNOLOGY

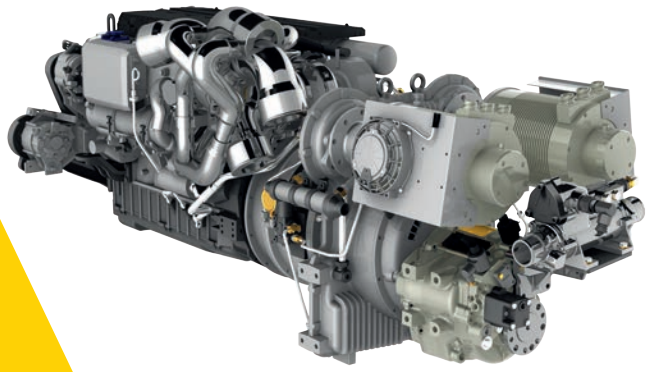

drive with us

Transfluid

Founded in Milan Italy in 1957, Transfluid has always been a point of reference in the world of industrial transmission equipment and the standard that its competitors measure themselves.
Fluid couplings, variable speed drives, brakes, clutches, couplings and hydraulic transmissions constitute the core of the product line, while ultra-modern technology, careful selection of materials and meticulous assembly are the key ingredients in the recipe that has placed those products at the forefront of the market. Thousands of customers continue to choose Transfluid for the most diverse and demanding applications, knowing they can rely on Transfluid's technical department, where design, engineering and planning experts are always on hand to quickly resolve client's problems.
Italian dynamic innovation, coupled with ongoing staff development and more than fifty years of hard-earned expertise, are the foundation of the company's success.
Transfluid's unique approach has sparked small but important revolutions in the field of heavy-duty transmissions, for which recognition has come in the form of international awards.
Transfluid's catalogue boasts a wide range of products, and each unit produced is tested for safety, quality and durability. Being a world leader in the design and manufacture of fluid couplings, Transfluid has earned a reputation for diligent service, which assures the competence of the applications through careful quality control and on-site technical assistance.
In addition to the Italian Headquarter.
Transfluid's broad sales network consists of five branches located in China,
France, Germany, Russia and United States,
one representative office in Brazil and 32 distributors located throughout the world.

Transfluid's Hybrid

The industrial market has been focused on developing new technologies to reduce their ecological impact on land and sea.
Global awareness of air, noise and water pollution attributed to internal combustion engines has caused vehicle manufacturers to invest large amounts of money and resources into developing hybrid systems used in automobiles and small commercial vehicles.
However, because of the wide variety of drive line designs used in industrial and marine markets, a standardized, quality, heavy duty "hybrid product" has been impractical to develop.
Accepting the challenge to provide a hybrid product for this neglected market Transfluid is ready to introduce a solution for low to medium power marine and industrial applications.
For decades Transfluid has been manufacturing a wide range of power transmission equipments and electric motors/generators.
Profiting from their experience in thousands of industrial and marine applications and using their existing technology it resulted in the development of the technology of the future.

The System

The hybrid system works in three specific modes:

- **electric propulsion** to drive or sail at ZERO emissions and in absolute silence

- **engine propulsion** that uses the electric machine as generator to recharge the batteries

- **"booster" function** that allows the electric motor, during acceleration, to assist the engine in providing extra torque to the driveline

How It Works

The input side is a hydraulic or pneumatic controlled clutch.
When disengaged, the engine is disconnected from the rest of the driveline allowing the vehicle or vessel to be operated by the electric motor instead of the engine.
During engine operation, the clutch is engaged and the electric motor becomes a generator, recharging the batteries, if required.
By operating the engine and electric motor at the same time, the "booster" operation is engaged, increasing the total available power to the driven machine.
All operations are controlled via Transfluid's proprietary electronic controller MPCB-R5, which communicates with all equipements through CAN BUS protocol, making the system a simple "plug and play" solution.

Industrial hybrid

HTV700

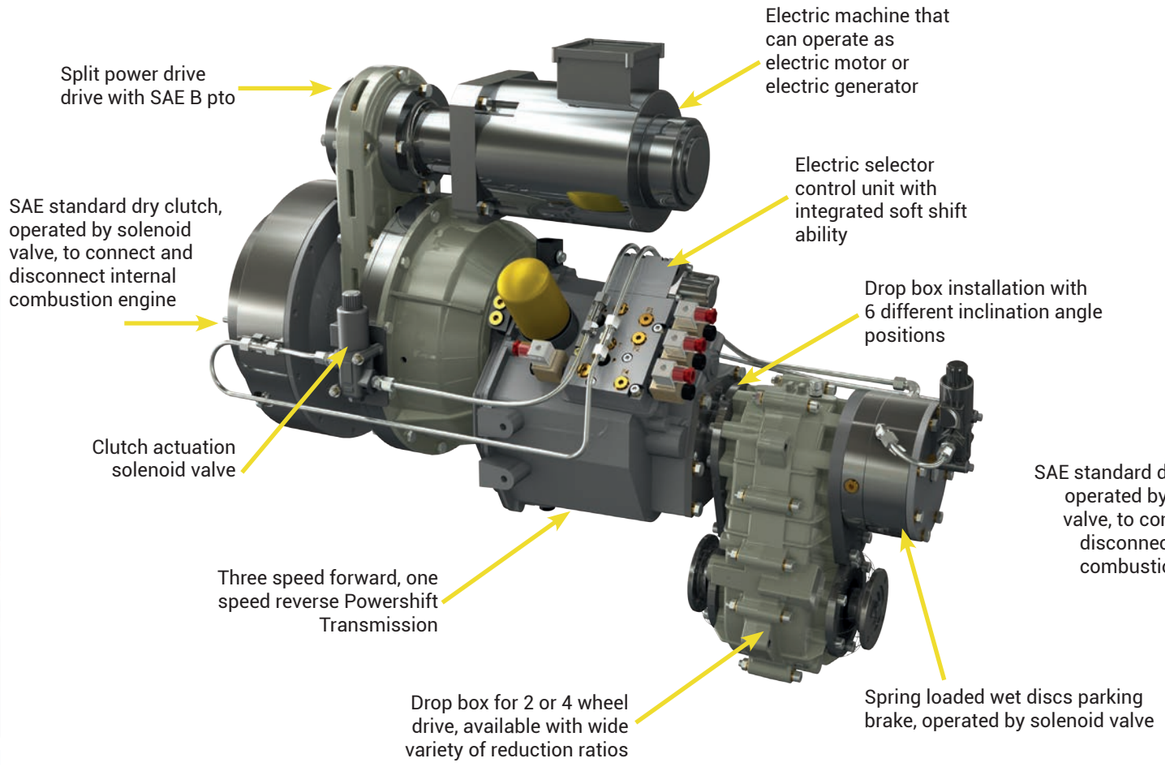

HM560
with Hydrostatic Transmission

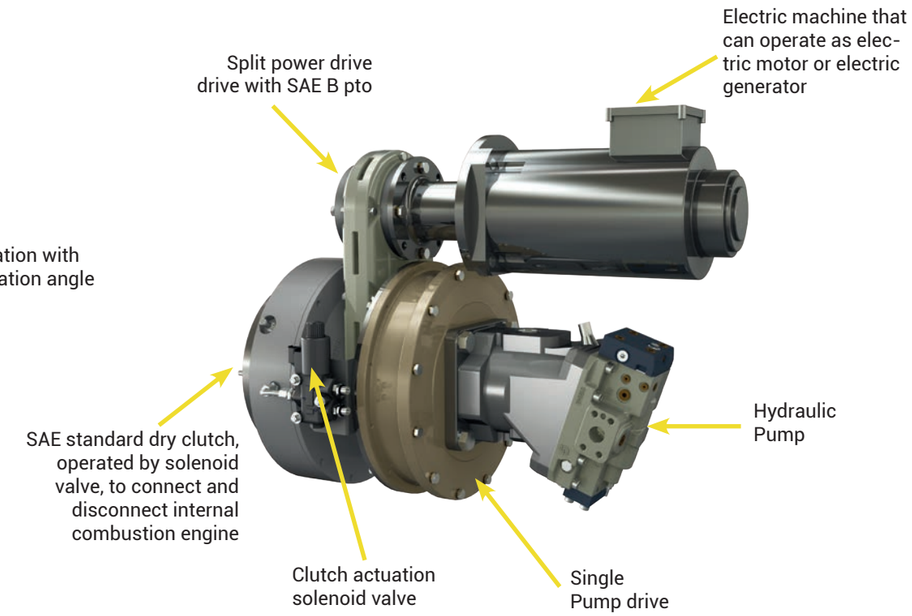

Working scheme

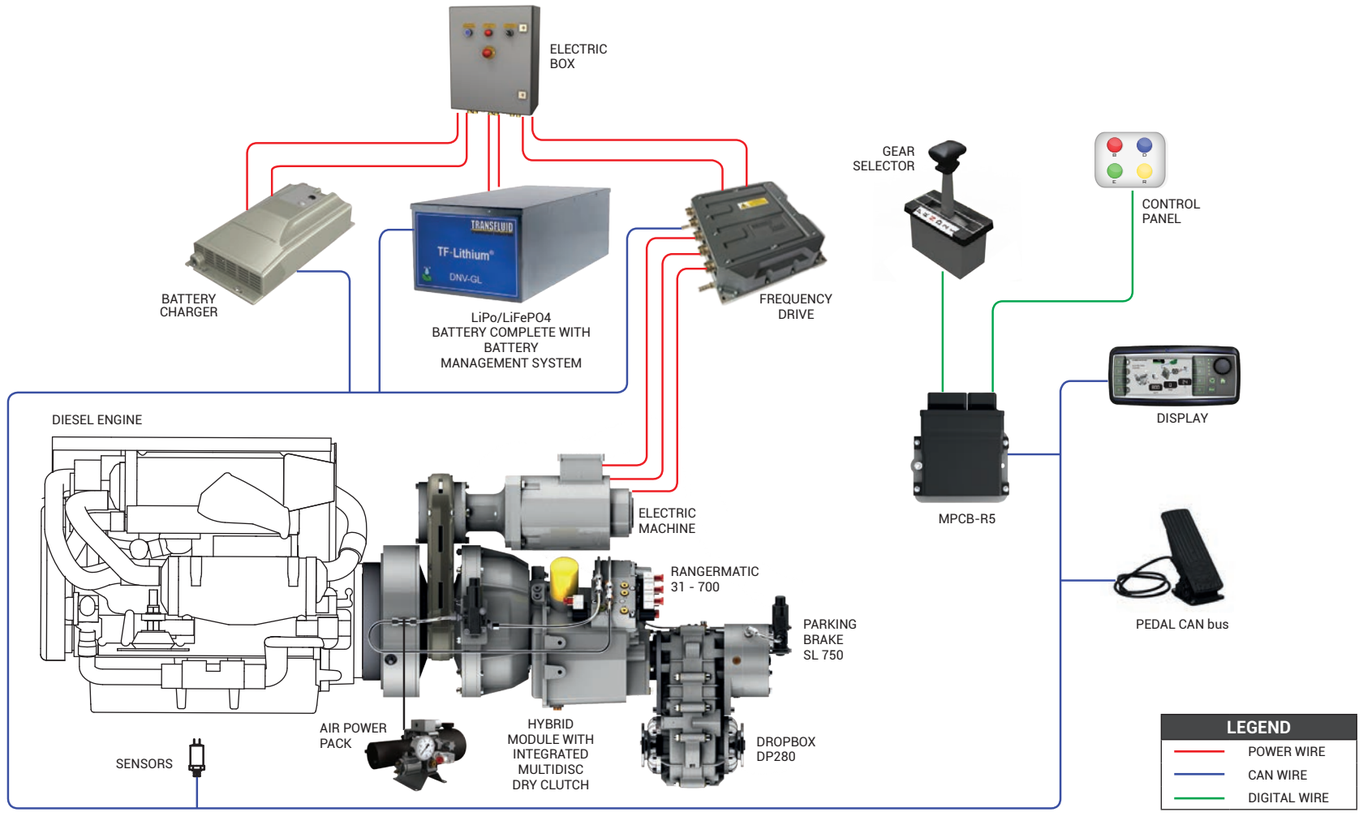

Marine hybrid

HTM700

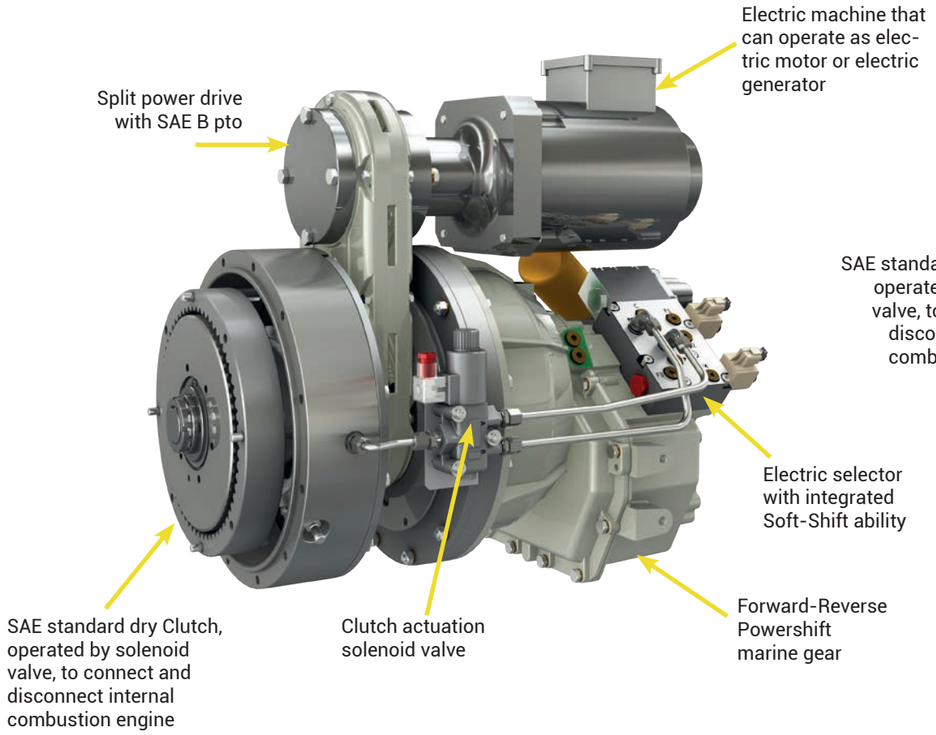

HM560 with Cardan Shaft

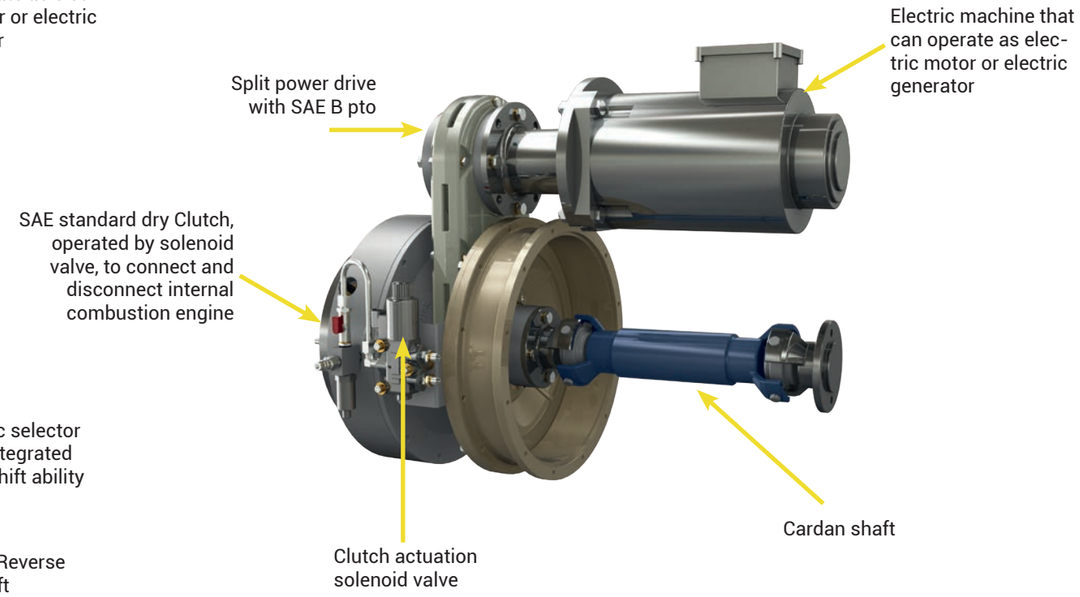

Working scheme

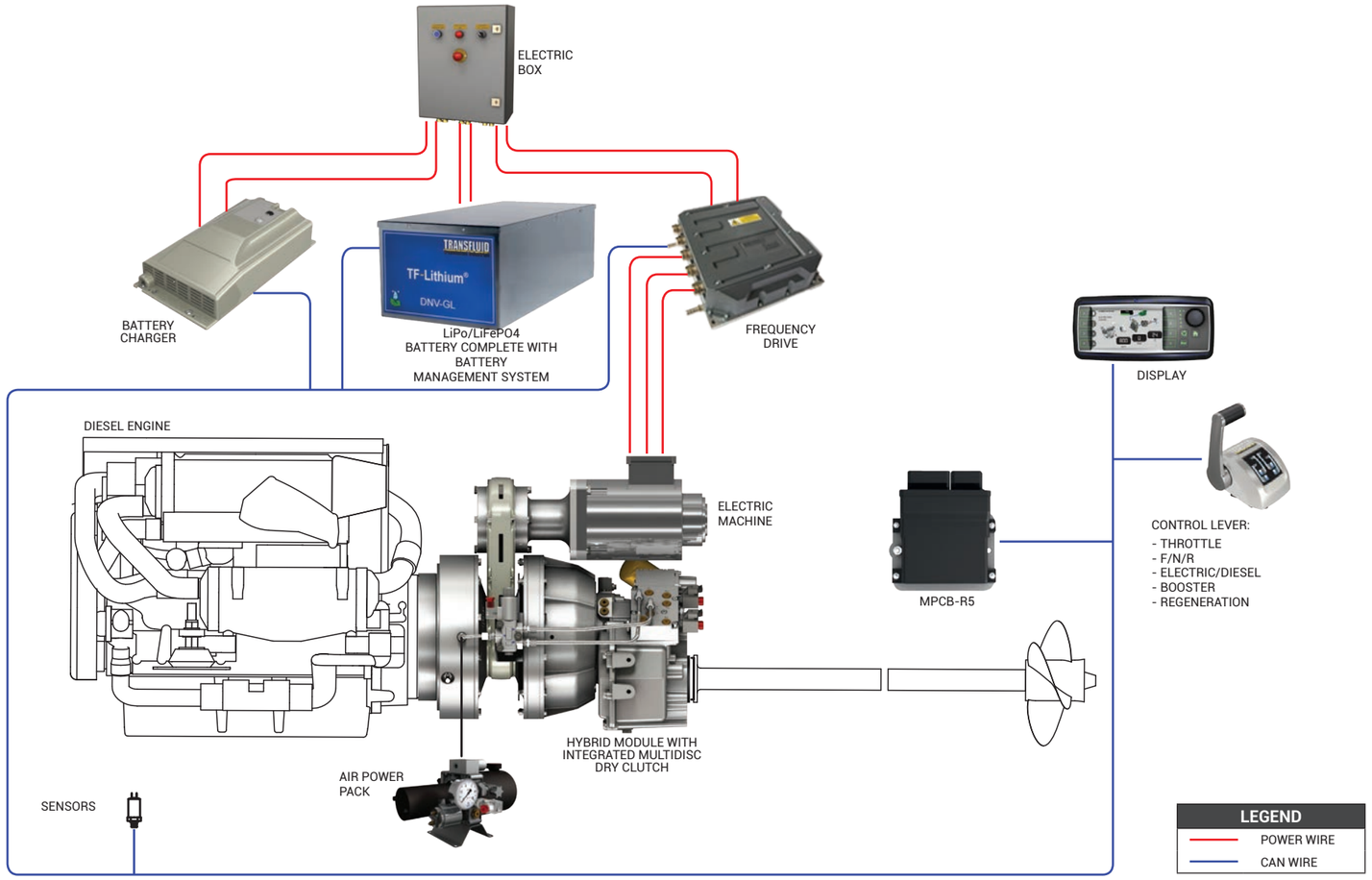

The hybrid series

In close cooperation with leading battery and motorcontroller manufacturers the HM Module series(560-2000-3350-6300) was developed to provide a standard, simple, quality solution. Designed to “sandwich” between an engine with a SAE flywheel and housing and transmission with a SAE input, the HM module provides a seamless solution that is easier to apply and simpler to operate than any application specific solution. Additionally, the electric machine (the motor generator) can be mounted in multiple positions in order to provide the best fit for the engine compartment. To install, all that is required is a short distance between the engine and transmission, this make it an ideal solution for retrofits and new designs.

Transfluid also provides two packages that couple the HM technology with their power shift transmissions and marine products. The HTV700 is a complete vehicle transmission product utilizing a power shift transmission, 4wddrop box and brake. Designed to be exceptionally compact it is ideal forground support equipment and small mining and construction machines. The HTM700 is a hybrid marine transmission. The electric function is becoming mandatory in many ports where they are trying to mitigate the air and water pollution caused by tendering and docking vessels. The HTV700 is applicable for engines up to 95 kW (127 hp) while the HTM700 is capable of 140kW (187 hp). Both Packages are equipped with a come home feature.

Reference catalogs of
the products we use in hybrid & electric technology

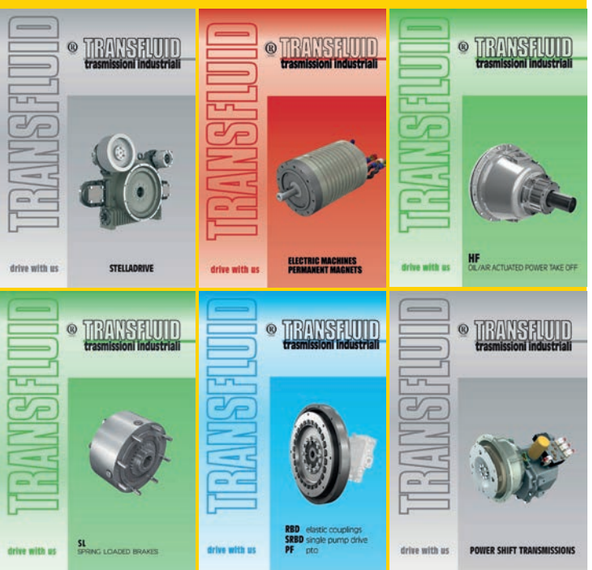

Technical specifications

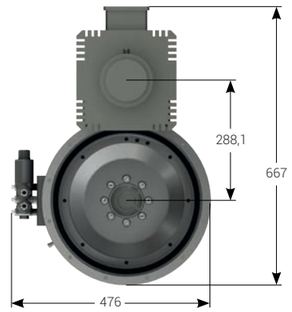

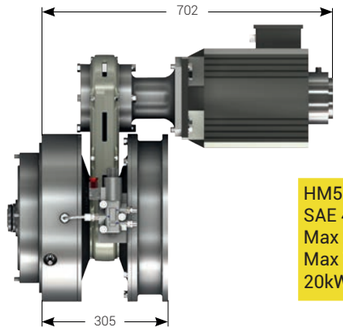

HM560 Hybrid Module
SAE 4 to SAE 4 distance = 305 mm
Max N° of Electric Machine: 1
Max Tot Elec. Input Power:
20kW @ 3000rpm

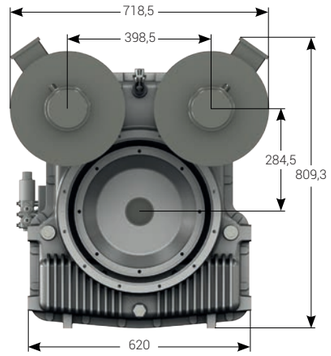

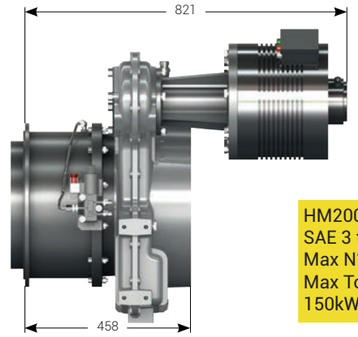

HM2000 Hybrid Module
SAE 3 to SAE 3 distance = 458 mm
Max N° of Electric Machine: 2
Max Tot Elec. Input Power:
150kW @ 3000rpm

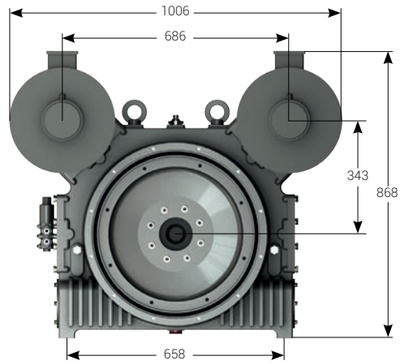

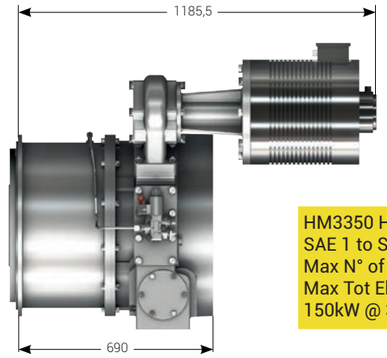

HM3350 Hybrid Module
SAE 1 to SAE 1 distance = 690 mm
Max N° of Electric Machine: 4
Max Tot Elec. Input Power:
150kW @ 3000rpm

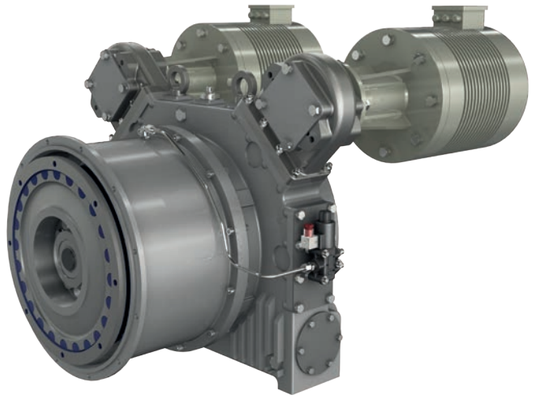

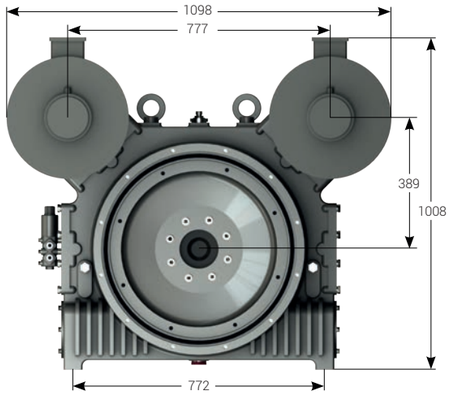

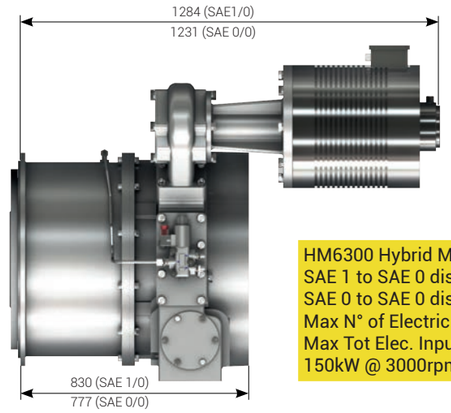

HM6300 Hybrid Module
SAE 1 to SAE 0 distance = 830 mm
SAE 0 to SAE 0 distance = 777 mm
Max N° of Electric Machine: 4
Max Tot Elec. Input Power:
150kW @ 3000rpm

Why Transfluid

By dedicating significant resources in the research and development of the Hybrid System range of products Transfluid is capable of providing complete hybrid solutions as well as the technical support required by manufacturers to implement these products. Transfluid's Hybrid System easily integrates into traditional propulsion systems assuring an efficient solution to green power and fuel economy.
All modules fit between the engine and transmission, occupying limited space, as though they are an integrated and independent component in the propulsion driveline.

Not only the ecological sustainability is one of the advantages of Hybrid solutions but fuel savings and energy management are of the same importance. With the "booster" function, designers can consider a lower power engine yet still maintain the desired performances. Ship owners can retrofit their vessels thereby providing lower costs and profiting from immediate benefits.

Transfluid is not just a supplier, but also a partner. By providing innovative technology coupled with competitive pricing, even the most difficult hybrid problems can be quickly solved.

HYBRID TRANSMISSION	INPUT & OUTPUT Standard (1) SAE J617 & J620	MAX INPUT TORQUE Nm (lb-ft)	INPUT POWER INDUSTRIAL kW (hp) - rpm	INPUT POWER MARINE kW (hp) - rpm	WEIGHT kg (lbs)
HM560	SAE4-10"	560 (414)	115 (155)-3000	180 (240)-3800	120 (265)
HM2000	SAE3-11.5"	2000 (1478)	350 (470)-2600	435 (580)-3000	350 (772)
HM3350	SAE1-14"	3350 (2476)	500(670)-2200	620 (830)-2300	560 (1236)
HM6300	SAE1/0-14"/18"	6300 (4647)	920(1230)-2100	1230 (1650)-2300	900 (1986)
HTV700	SAE4-10"(4)	300 (222)	95(125)-3000		245(2) (540)
HTM700	SAE4-10"(4)	560 (414)		140 (185)-3000	221(2) (487)

(1)SAE J620: different Input or Output connections available upon request
(2) Without drop box & brake
(3) With cooler
(4) DIN 120 available

E. MACHINE	WEIGHT kg (lbs)	MAX SPEED rpm	BATTERY Vdc	MOTOR CONTROLLER	HYBRID TRANSMISSION
EM180-8	25 (55)	3000	96	SIZE 8	HM560-HT700
EM180-12	35 (76)	3000	96	SIZE 20	HM560-HT700
EM220-15	45 (98)	3000	96	SIZE 20	HM560-HT700
EM220-20	55 (120)	3000	96	SIZE 20	HM560-HT700
EM220-35	80 (175)	3000	288	SIZE 75	HM2000-HM3350-HM6300
EM300-50	135 (295)	3000	288	SIZE 75	HM2000-HM3350-HM6300
EM300-75	185 (404)	3000	288	SIZE 75L	HM2000-HM3350-HM6300
EM300-100	195 (425)	3000	384	SIZE 75L	HM2000-HM3350-HM6300

E. MACHINE	MOTOR MODE Power kW (hp)	MOTOR MODE From battery A max	GENERATION MODE Power kW (hp)	GENERATION MODE From battery A max
EM180-8	8 (11)	87	7 (10)	84
EM180-12	12 (16)	140	10 (14)	124
EM220-15	15 (20)	172	14 (19)	162
EM220-20	20 (27)	215	17 (23)	185
EM220-35	35 (47)	190	33 (45)	119
EM300-50	50 (68)	176	49 (67)	177
EM300-75	75 (102)	267	72 (98)	260
EM300-100	100 (136)	295	97 (132)	290

MPCB-R5 & Display Harness

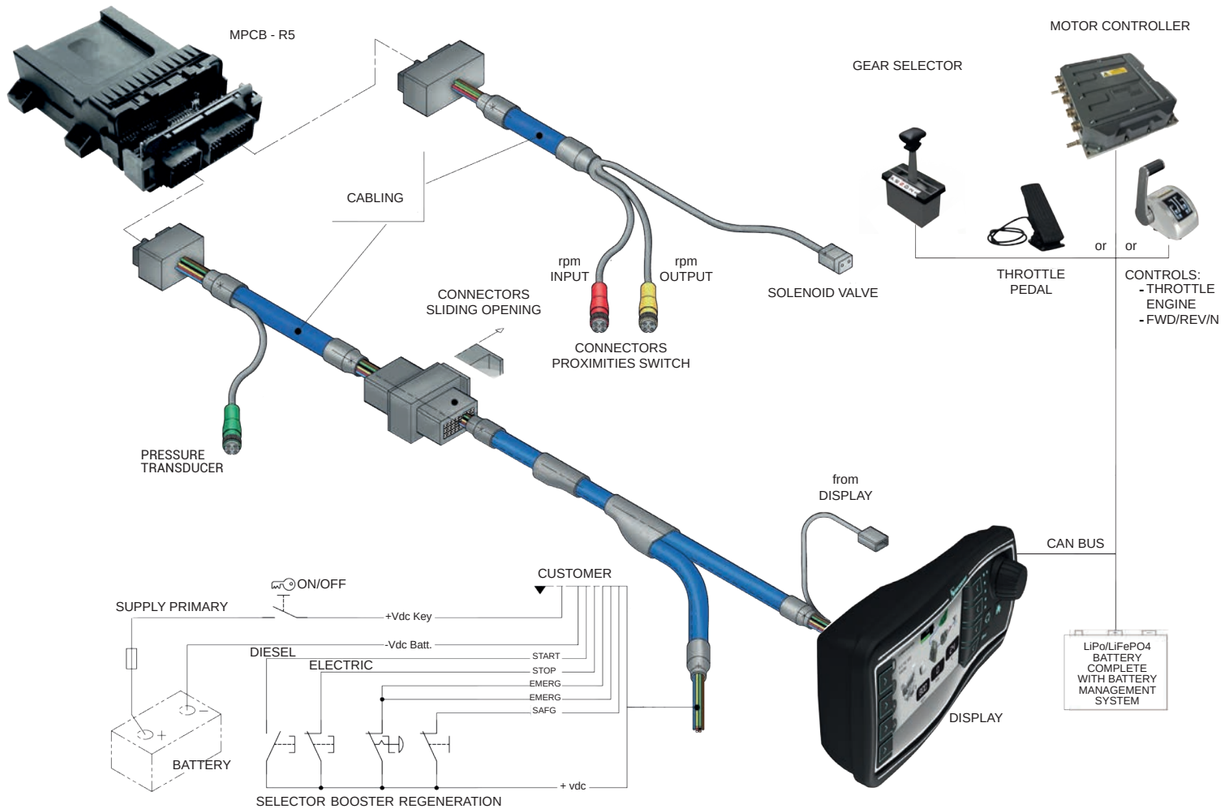

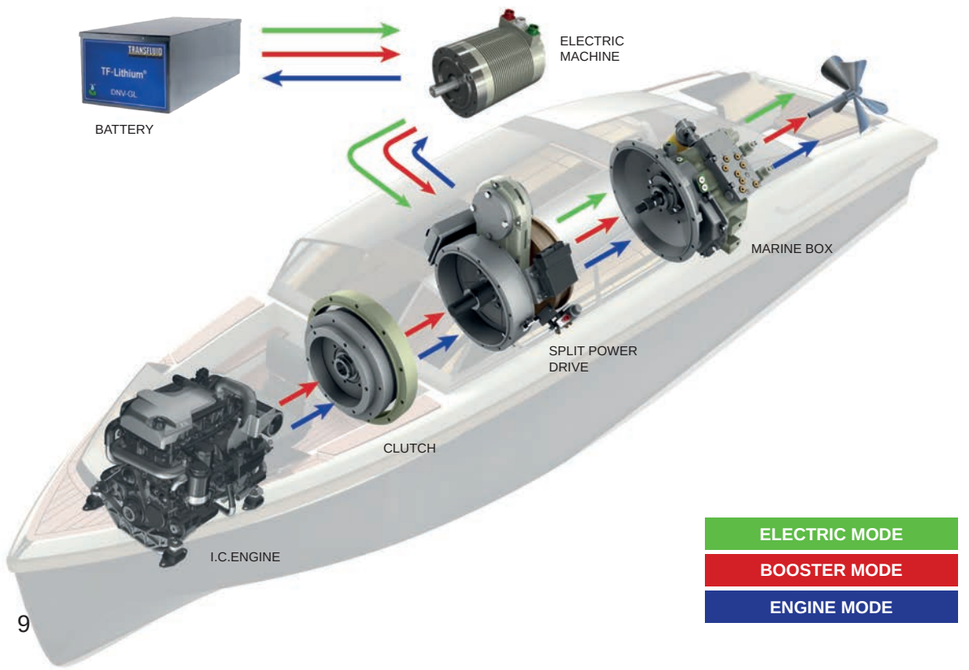

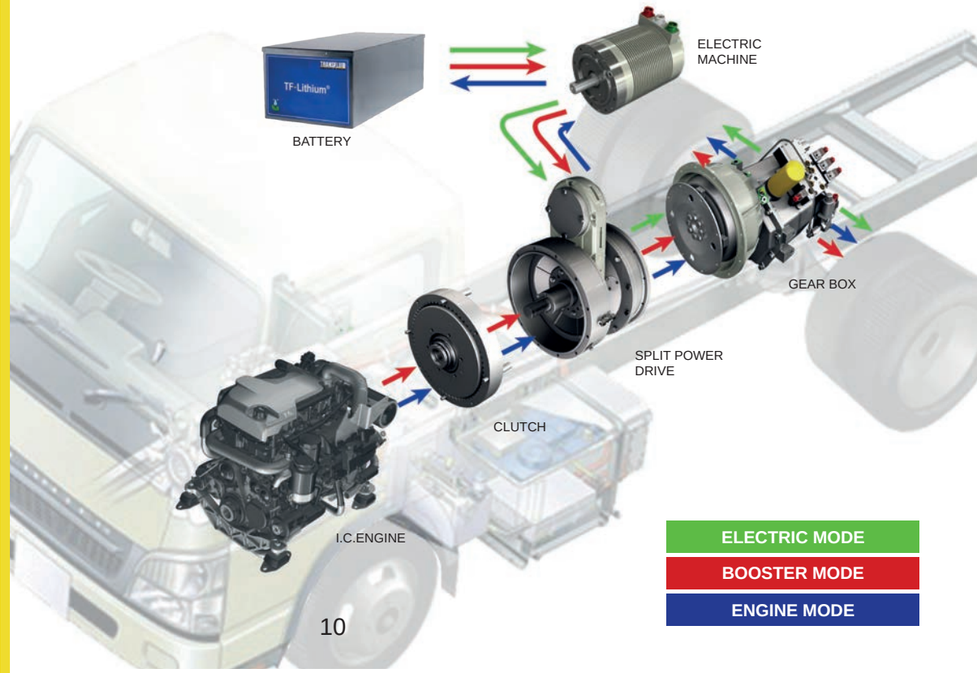

Electric Propulsion System

The EPS (ELECTRIC PROPULSION SYSTEM) provides innovative electric propulsion through the combination of standard Transfluid products. Integrating standard components and adhering to SAE standards produces a new product which easily interfaces with any user and application. When used with commercial vehicles, the EPS system includes an automatic "Powershift" RANGERMATIC or REVERMATIC transmission. For marine propulsion the REVERMATIC marine gear uses the reliable RBD coupling.
Both transmissions can be installed with Transfluid's permanent magnets electric motor. This improves the operations of the vehicle or boat by using the efficiency and performance of the electrical machine.

EPS industrial system

The innovative concept of EPS consists of an automatic RANGERMATIC "Powershift" transmission coupled to a permanent magnet electric motor. This optimizes the driving experience of the vehicle and enhances the performance of the motor. The RANGERMATIC reduction ratios allow the user to select the optimal ratio according to the operating conditions. The addition of the DROP BOX DP280 on the output of the EPS system provides additional gear ratios to enhance the electric motor performances. Additionally, the drop box is available with two outputs for four-wheel drive applications. This provides identical use and driving of the EPS system to those of a combustion engine.The use of batteries, indispensable for the supply of the electric machines, allows the recovery of kinetic energy during deceleration and braking (Kinetic Energy Recovery System) storing energy that would otherwise be lost, increasing the autonomy of the vehicle.

Electric machine

SAE4-10" OUTPUT
with cooling system (closed loop) and PTO.
Temperature and pressure switch gauge

Hydraulic pump

Gearbox

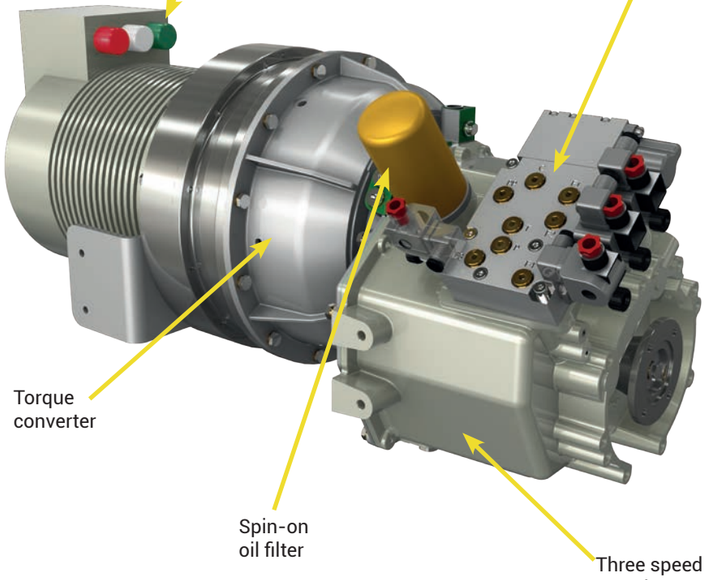

TYPE	POWER at 3000 rpm kW (hp)	NOMINAL TORQUE Nm (lbs-ft)	BATTERY VOLTAGE Vdc	NOMINAL CURRENT A	WEIGHT kg (lbs)	TRANSMISSION	COUPLING
EPS08	8 (11)	25 (18)	96	85	25 (55)	REVERMATIC ratio: 1.45 - 1.88 - 2.25 or RANGERMATIC ratio: 1.88 and 2.75 + 1.88 reverse gear	SRBD for hydraulic pump
EPS 12	12 (16)	38 (28)	96	125	35 (76)		
EPS15	15 (20)	48 (35)	96	148	45 (98)		
EPS20	20 (27)	64 (47)	96	170	55 (120)		
EPS35	35 (47)	111 (82)	288	135	80 (175)		
EPS50	50 (67)	159 (117)	288	170	135 (295)		
EPS75	75 (101)	239 (176)	288	289	185 (404)		
EPS100	100 (134)	318 (235)	384	370	195 (425)		

Technical features, dimensions and any other data are not binding. Transfluid S.p.A. reserves the right to change then without notice

Electric Propulsion System

EPS marine system

The innovative concept of the marine EPS REVERMATIC11-700 RBD marine gear coupled to the electric motor allows you to maximize the maneuverability of the boat and to increase the performance of the electric motor. The reduction ratio of the marine gear allows the user to size the propeller of the boat to demand the maximum power delivered by the electric motor, fully exploiting the motor power and speed. The reverse function is performed by the REVERMATIC11-700 RBD marine gear. This protects the electrical components from transient current peaks.
In addition, the EPS Marine system can be used as an extra drive system on large power engines by connecting the output of the EPS system to the PTO (commonly called PTI in marine transmission).
To optimize the performance of the motor a DROP BOX DP280 can be mounted on the output of the EPS system, before to PTI, to provide additional gear ratios optimizing the motor torque output.
An example:
By using a compact EPS system weighting only 220 kg, powered at 300 V dc, it is possible to obtain on the PTI a torque of 2750 Nm, a very interesting value for the propulsion of large boats.

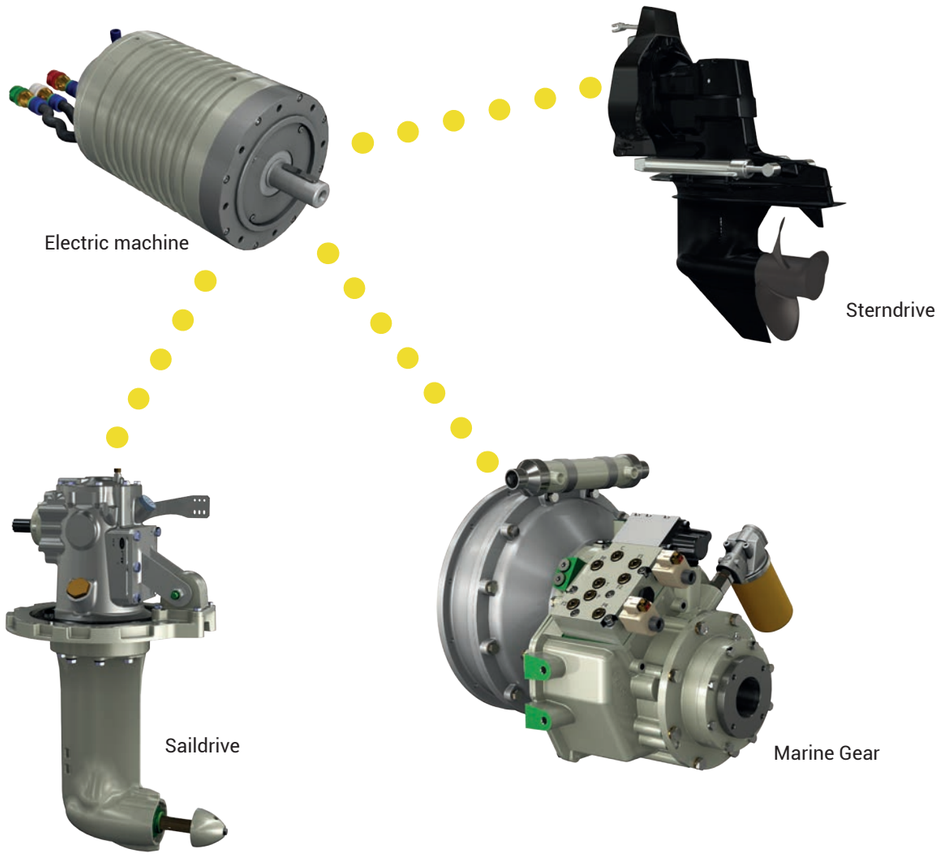

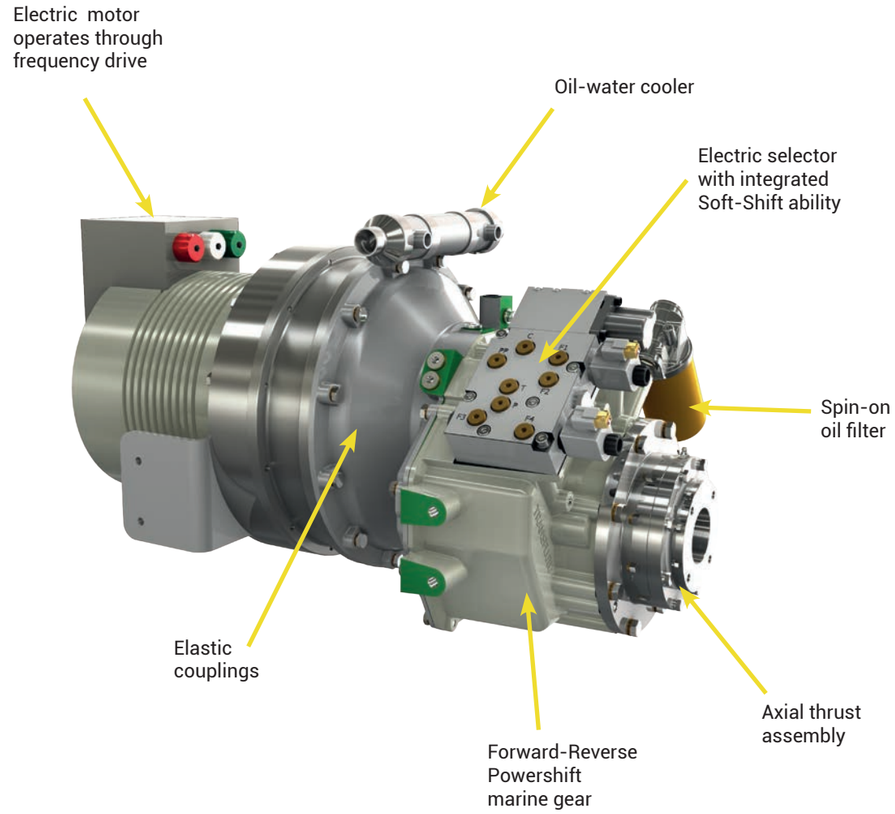

TYPE	POWER at 3000 rpm kW (hp)	NOMINAL TORQUE Nm (lbs-ft)	BATTERY VOLTAGE Vdc	NOMINAL CURRENT A	WEIGHT kg (lbs)	TRANSMISSION	TRANSMISSION	TRANSMISSION
EPS08	8 (11)	25 (18)	96	85	25 (55)	Marine gear	Sail drive	
EPS 12	12 (16)	38 (28)	96	125	35 (76)	Marine gear	Sail drive	
EPS15	15 (20)	48 (35)	96	148	45 (98)	Marine gear	Sail drive	
EPS20	20 (27)	64 (47)	96	170	55 (120)	Marine gear	Sail drive	Stern drive
EPS35	35 (47)	111 (82)	288	135	80 (175)	Marine gear	Sail drive	Stern drive
EPS50	50 (67)	159 (117)	288	170	135 (295)	Marine gear		Stern drive
EPS75	75 (101)	239 (176)	288	289	185 (404)	Marine gear		Stern drive
EPS100	100 (134)	318 (235)	384	370	195 (425)	Marine gear		

Technical features, dimensions and any other data are not binding. Transfluid S.p.A. reserves the right to change then without notice

Remote monitoring - Fast service
Safe - Reliable - Timely

Annual subscription for remote monitoring and service of Hybrid or Electric System through web portal with password access

- Gift box with emergency spares kit
- Delivery of spares sparts to the nearest service center within 72 hours
- Advance notice for maintenance
- Online monitoring

TRANSFLUID®
industrial & marine

December 2017

ITALY
TRANSFLUID S.p.A.
Via Guido Rossa, 4
21013 Gallarate (VA)
Ph. +39.0331.28421
Fax +39.0331.2842911
info@transfluid.it

CHINA
TRANSFLUID BEIJING TRADE CO.LTD
101300 Beijing
Ph. +86.1060442301-2
Fax +86.1060442305
tbtcinfo@transfluid.it

FRANCE
TRANSFLUID FRANCE s.a.r.l.
38110 Rochetoirin
Ph. +33.9.75635310
Fax +33.4.26007959
tffrance@transfluid.it

GERMANY
TRANSFLUID GERMANY GmbH
D-48529 Nordhorn
Ph. +49.5921.7288808
Fax +49.5921.7288809
tfgermany@transfluid.it

RUSSIA
TRANSFLUID OOO
143100 Moscow
Ph. +7.495.7782042
Mob. +7.926.8167357
tfrussia@transfluid.it

U.S.A.
TRANSFLUID LLC
Auburn, GA 30011
Ph. +1.770.8221.777
Fax +1.770.8221.774
tfusa@transfluid.it

www.transfluid.eu
www.buy-transfluid.com

drive with us